TK-N

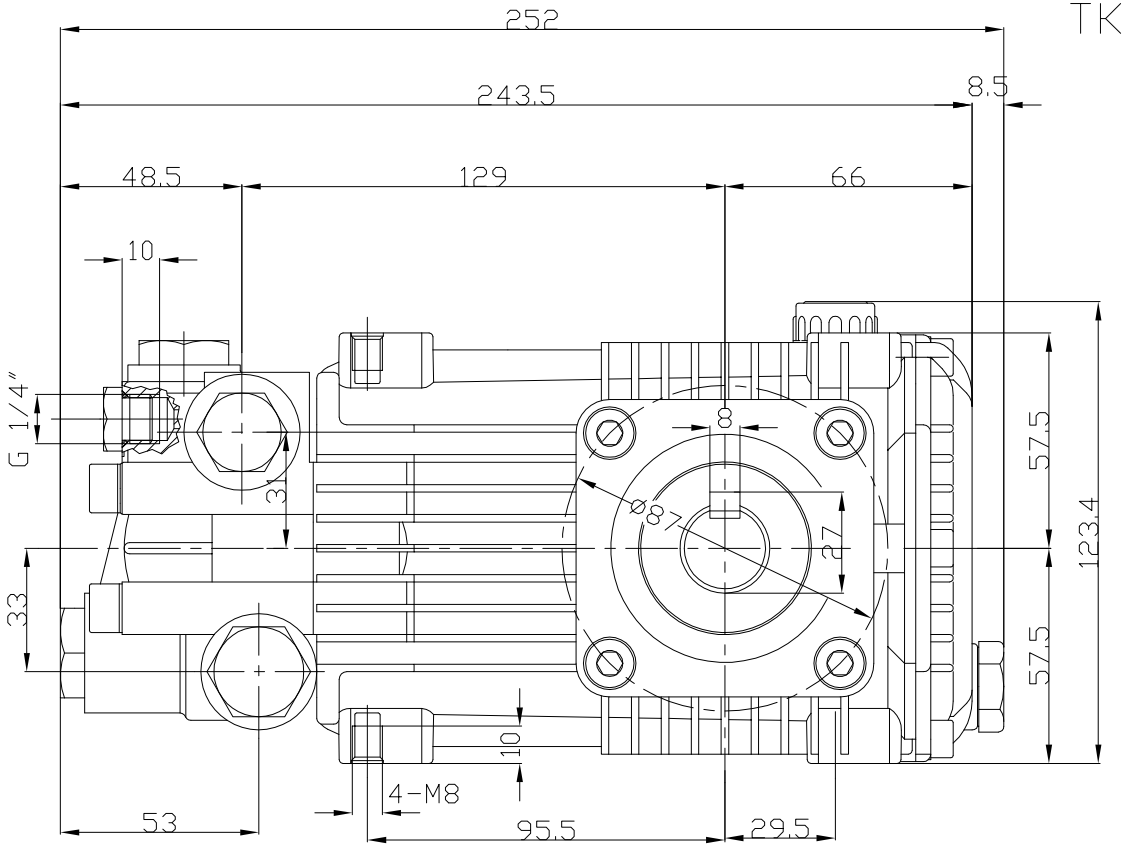
252
243.5
8.5
48.5
129
66
10
G 1/4"
31
33
8
Ø87
27
57.5
57.5
123.4
10
4-M8
53
95.5
29.5

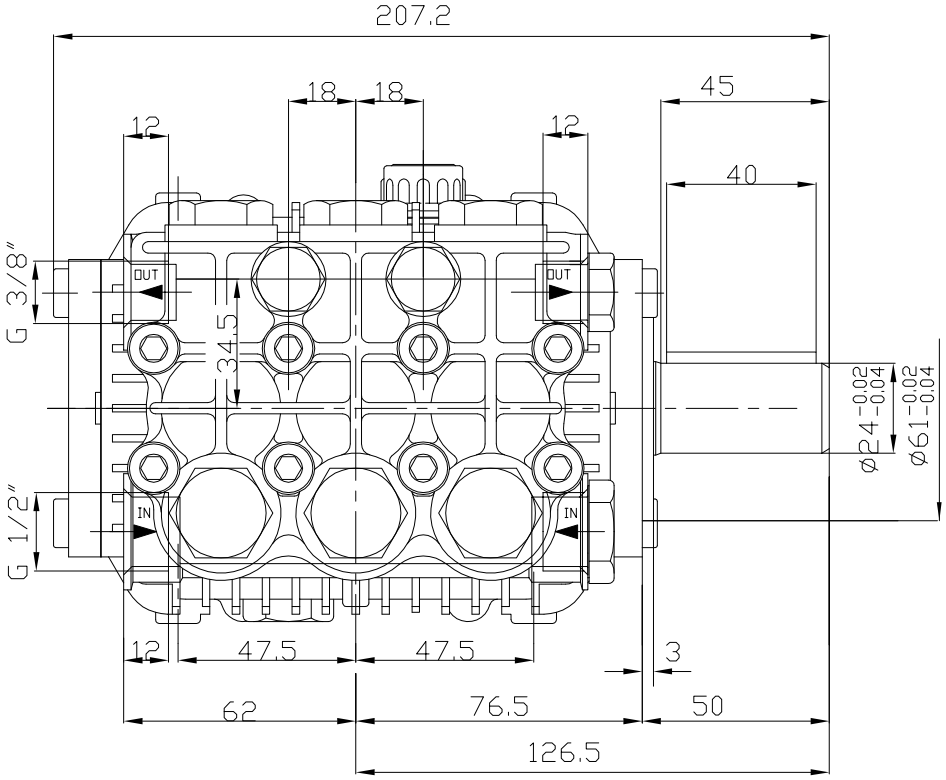
207.2
18
18
45
12
12
40
G 3/8"
OUT
OUT
34.5
Ø24-0.02 -0.04
Ø61-0.02 -0.04
G 1/2"
IN
IN
12
47.5
47.5
3
62
76.5
50
126.5